25-DIC200

Chardon IEC 25kV 200A Insulated Protective Cap

www.chardongroup.com

APPLICATION

The Chardon 25kV 200A Insulated Protective Cap can be used for temporary or permanent applications and provides a submersible, fully shielded insulated cap for energized bushings. When installed on a IEEE bushing interface or junctions, it is properly grounded using the attached drain wire, and providing physically seal and electrically insulate bushing interfaces.

The Chardon insulated cap design incorporates peroxide cured, EPDM insulation rubber, and a semi-conducting insert and outer shield. The outer conductive shield maintains ground potential on the cap's surface when a grounding wire is connected to a common ground.

KEY FEATURES

- Provides a fully shielded and submersible connection when mated with the proper bushings.
- 100% electrical tested at factory.
- Mounting can be vertical, horizontal, or any angle in between.
- No minimum phase clearance requirements.
- IEEE/ANSI Standard 386.

PRODUCTION TESTS

Tests conducted in accordance with IEEE/ANSI Standard 386.

- Minimum Corona Voltage Level – 19 kV
- AC 1 Minute Withstand – 40kV

Tests conducted in accordance with Chardon manufacturing process requirements:

- Physical Inspection
- Periodic Dissection
- Periodic X-ray Analysis

VOLTAGE RATINGS

Max. Rating Phase to Ground	25 kV
AC 60Hz 1 Minute Withstand	40 kV
Minimum Corona Voltage Level	19 kV
BIL and Full Wave Crest	125 kV

Each kit includes the following:

- Insulated Cap
- Silicone Grease
- Installation Instruction Sheet
- Bail Assembly

• 24-DIC250-100918-REV03

DETAILED COMPOSITION OF THE CHARDON 25KV INSULATED CAP

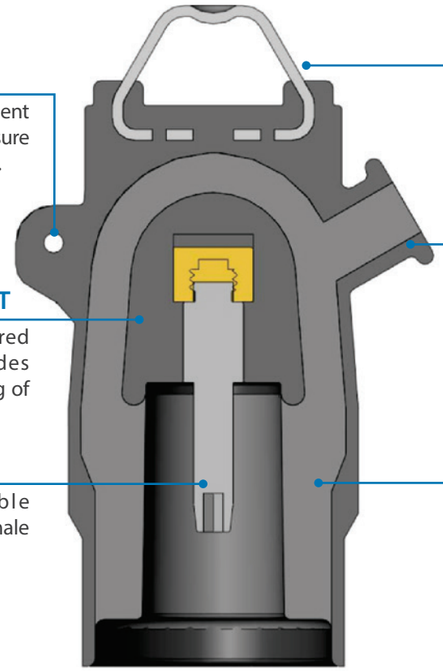

DRAIN WIRE TAB

Drain wire table provide a convenient point to connect drain wire to ensure grounding of the connector shield.

SEMICONDUCTING INSERT

Precision molded peroxide cured semiconducting insert provides corona-free electrostatic shielding of the connector.

PROBE

Brass probe provid esreliable conductive path with mating female contacts.

PULLING EYE

Stainless steel pulling eye for hotstick operations.

SEMICONDUCTING SHIELD

Precision molded peroxide cured semiconducting shield provides ground shield continuity.

INSULATION LAYER

High quality peroxide cured EPDM insulation is mixed and formulated in-house for complete control of rubber characteristics.

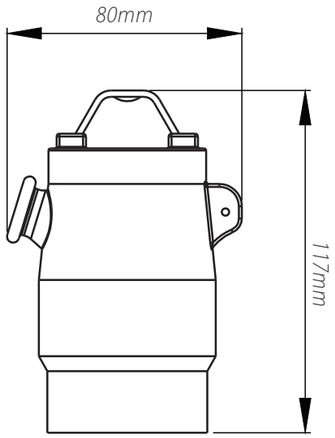

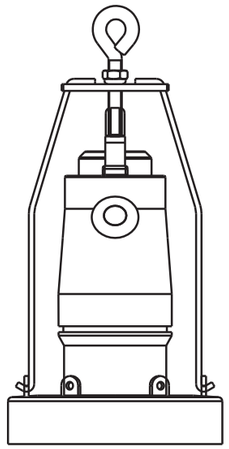

ORDERING INFORMATION

25 kV, 200A Insulated Protective Cap	25-DIC200

CHARDON GROUP

CHARDON TAIWAN CORPORATION

No.37 Min-Chie Road, Tung Lo
Industrial Park, Miao Li, Taiwan 366
Tel : +886-37-984385
Fax : +886-37-984770

www.chardongroup.com • info@chardongroup.com